SPECIFICATION APPLIED

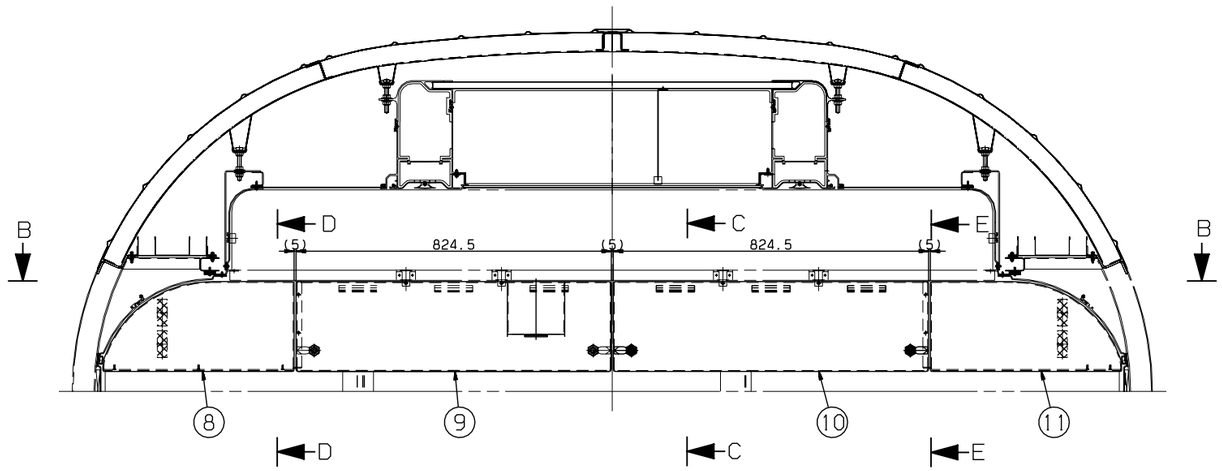

VIEW A-A

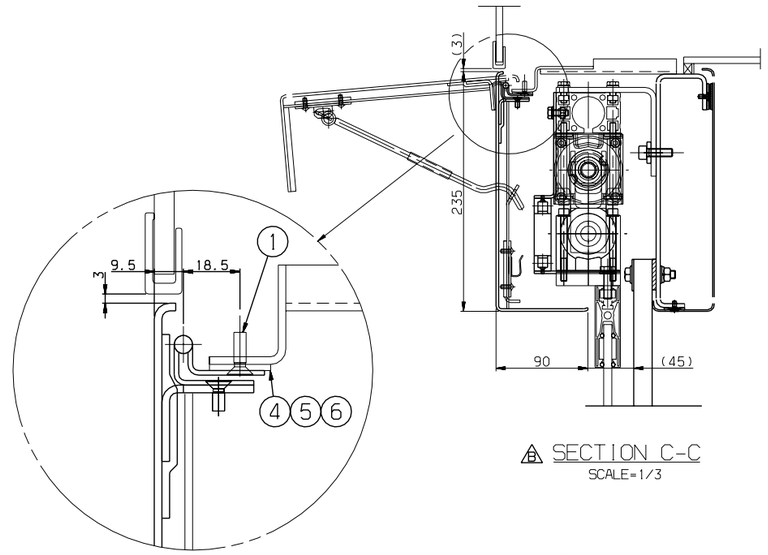

A SECTION C-C
SCALE=1/3

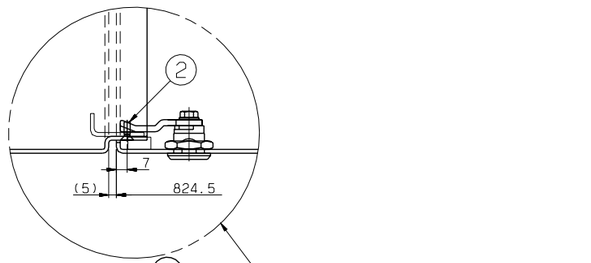

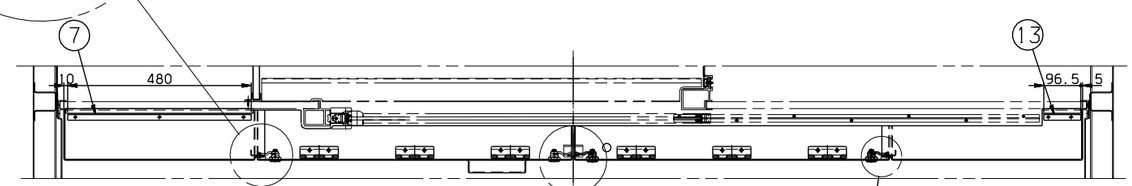

VIEW B-B

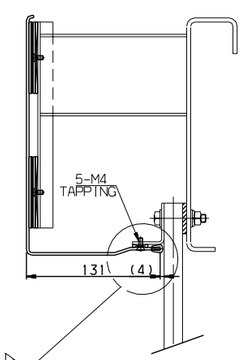

SECTION D-D
SCALE=1/3

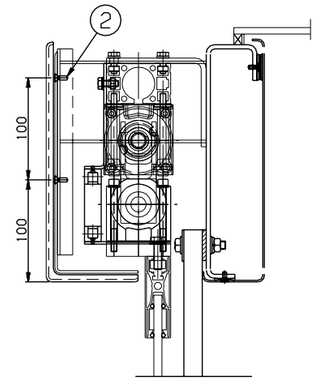

A SECTION E-E
SCALE=1/3

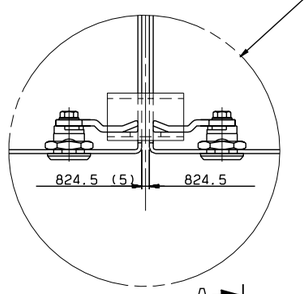

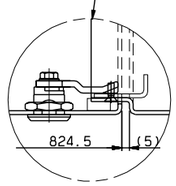

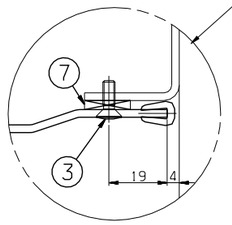

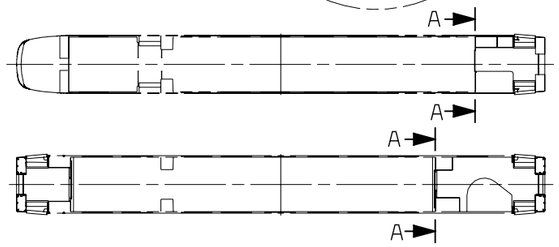

KEY PLAN

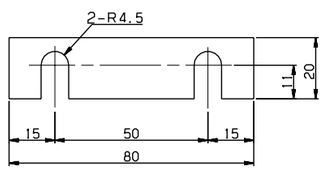

DETAIL #4,5,6
SCALE=1/1

NOTE
1. OPENING THE COVER, IT SHALL BE ON INTERFERENCE.
2. THE TOLERANCE OF CAR WIDTH SHALL BE ABSORBED BY THE GAP BETWEEN COVERS.
3. PART 4,5 AND 6 SHALL BE CUT ACCORDING TO THE WORK CONDITION.
4. PART 1 SHALL BE APPLIED WITH LOCTITE 222.

품번 NO.	부품 번호 PART NO.	품명 DESCRIPTION	재질 MATERIAL	수량 Q'TY	중량 W.T	비고 REMARKS
13	RFP55017AN0-013	PACKING	NEOPRENE RUBBER	1		T3X15X96.5 ~~T3X15X150~~
~~12~~	~~RFD300I2AN0~~	~~DOOR MODE SWITCH~~	~~ASSY~~	~~1~~		
11	RFP55023AN0	COVER, INSIDE, TYPE D	ASSY	1		
10	RFP55022AN0	COVER, INSIDE, TYPE C	ASSY	1		
9	RFP55021AN0	COVER, INSIDE, TYPE B	ASSY	1		
8	RFP55020AN0	COVER, INSIDE, TYPE A	ASSY	1		
7	RFP55017AN0-007	PACKING	NEOPRENE RUBBER	1		T3X15X480
6	RFP55017AN0-006	PACKING	NEOPRENE RUBBER (HARD BOARD)	6		T3X20
5	RFP55017AN0-005	PACKING	NEOPRENE RUBBER (HARD BOARD)	6		T2X20
4	RFP55017AN0-004	PACKING	NEOPRENE RUBBER (HARD BOARD)	6		T1X20
3	RS60609-097S	SCREW O.H	SUS304	5		M4X12
2	RS60607-097S	SCREW F.H	SUS304	4		M4X12
1	RS60607-098S ~~RS60607-097S~~	SCREW F.H	SUS304	12		M4X14 ~~M4X12~~

승인 APP	설계 DGN	검도 CHK	승인 APP
H.G.RYU 2008.10.15	Y.D.KIM 2008.10.10	H.S.KIM 2008.10.15	H.G.RYU 2008.10.15

재질 MAT'L ASSY
중량 G.W
일반공차 MC VO CT
B B B
SIZE A1

TITLE 명칭 COVER, INSIDE, FITTING

DRG. NO 도면 번호 RFP55017AN0 Ver. 00 Rev. -B

SCALE 1/8 SHEET 1 of 1

참고번 REF. NO. FPP08363

HYUNDAI Rotem 현대로템주식회사

기호 MARK	일자 DATE	내용 DETAIL OF REVISION(E.C ZONE)	설변번호 E.C NO.	설계 DGN	검도 CHK	승인 APP
BX5	2009.04.30	CHANGED DOOR./ DELETED PART NO.12	3D5101-U060	Y.D.KIM	H.S.KIM	H.G.RYU
AX6	2009.04.30	CHANGED PART	3D5101-U033	Y.D.KIM	H.S.KIM	H.G.RYU

치수 DIMENSION			
	~ 6	2	4
	~ 30	2	3
	~ 10	1	1.5
	< 3	0.5	1
	~3150	-	7
	~1600	4	5
	~ 800	3	4
	~ 400	2	3
	~ 200	1.5	2
	~ 100	1	1.5

등급 GRADE	A	B
주조, 주강품 CASTING (±)		
~20M	8	14	24
~15M	7	12	21
~12M	6	10	18
~8M	5	8	14
~4M	4	6	11
~2M	3	4	8
~1M	2	3	6
~315	1	2	4
~120	1	2	3
~30	1	1	1

등급 GRADE	A	B	C
용접 구조물 WELDING (±)			
~20M	-	6.0	8.0
~15M	-	5.0	7.0
~12M	-	4.0	6.0
~8M	-	3.0	5.0
~4M	0.8	2.0	4.0
~2M	0.5	1.2	3.0
~1M	0.3	0.8	2.0
~315	0.2	0.5	1.2
~120	0.15	0.3	0.8
~30	0.1	0.2	0.5
3~6	0.05	0.1	0.2

등급 GRADE	A	B	C
기계 가공품 MACHINING (±)			
가장자유로운 일반공차의 GENERAL TOLERANCE			

본 도면은 당사 재산으로서 사전승인 없이복사/배포 금지됨. PROPERTY OF ISSUING ENTITY, CANNOT BE DISTRIBUTED OR REPRODUCED WITHOUT AUTHORIZATION.

3D5101 | RFP- | 난-PRJT | 참리분출 | CATIA